SINGLE FREQUENCY TM-DOPED FIBER LASER

Continuous，High Power，Ultra Low Rin，Narrow Linewidth,Tunable

Precilasers offers 1700-2050 nm Tm-doped fiber amplifier with innovative ASE suppression technique. Maximum output power reaches up to 40 W for single-frequency operation. The lasers have ultra-low intensity noise(RIN<0.05%, 10Hz-10MHz) and excellent beam quality (M^2 <1.15), which makes them ideal light sources for the applications like optical lattice, laser atom cooling and biomedical. The full protection system of the laser ensures long-term free of maintenance and long life time

Key Features:

- Narrow linewidth
- Support seed built-in, Tunable
- Low intensity noise
- Good beam quality (M^2 <1.2)
- Seed Power off Protection System

Applications:

- Pump Laser for frequency converteds
- Laser Lidar
- Biomedical
- Laser cooling of atoms
- Pump for mid-IR OPO

Product: TFA-SF-1762-1-CW

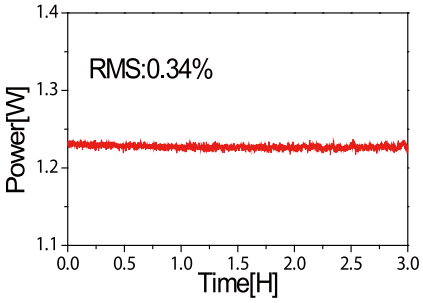

1W 1762 nm TFA power stability test

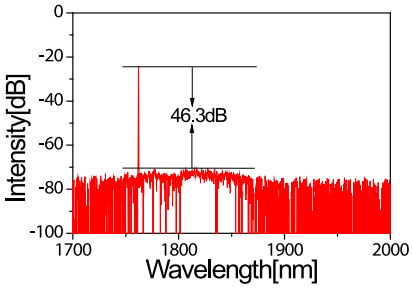

1W 1760 nm laser output spectrum

Model	TFA-SF-XX-YY-ZZ[1]			
Central Wavelength , nm	1700-1800	1800-1900	1900-1940	1940-2050
Output Power , W	2	10	20	40
Seed Laser Power , mW	>1			
Linewidth FWHM , KHz	~10 kHz(With Precilasers' Seed TFL-SF-1XXX-S)			
Operation Mode	CW			
Beam Quality	TEM_{00}, M^2<1.15			
PER, dB	> 20			
RMS Power Stability	<0.5 %@3hrs			
Output Connector	Collimated Output			
Cooling	Air Cooling/Water Cooling			
Power Supply	50-60Hz , 100-240VAC			

1: XX: Central Wavelength；YY: Output Power；ZZ: Operation Mode.

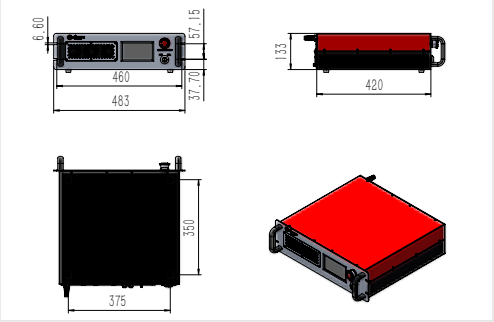

Size for Air-cooling Version

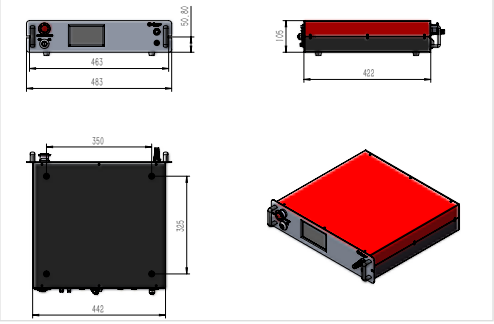

Size for Water-Cooling Version